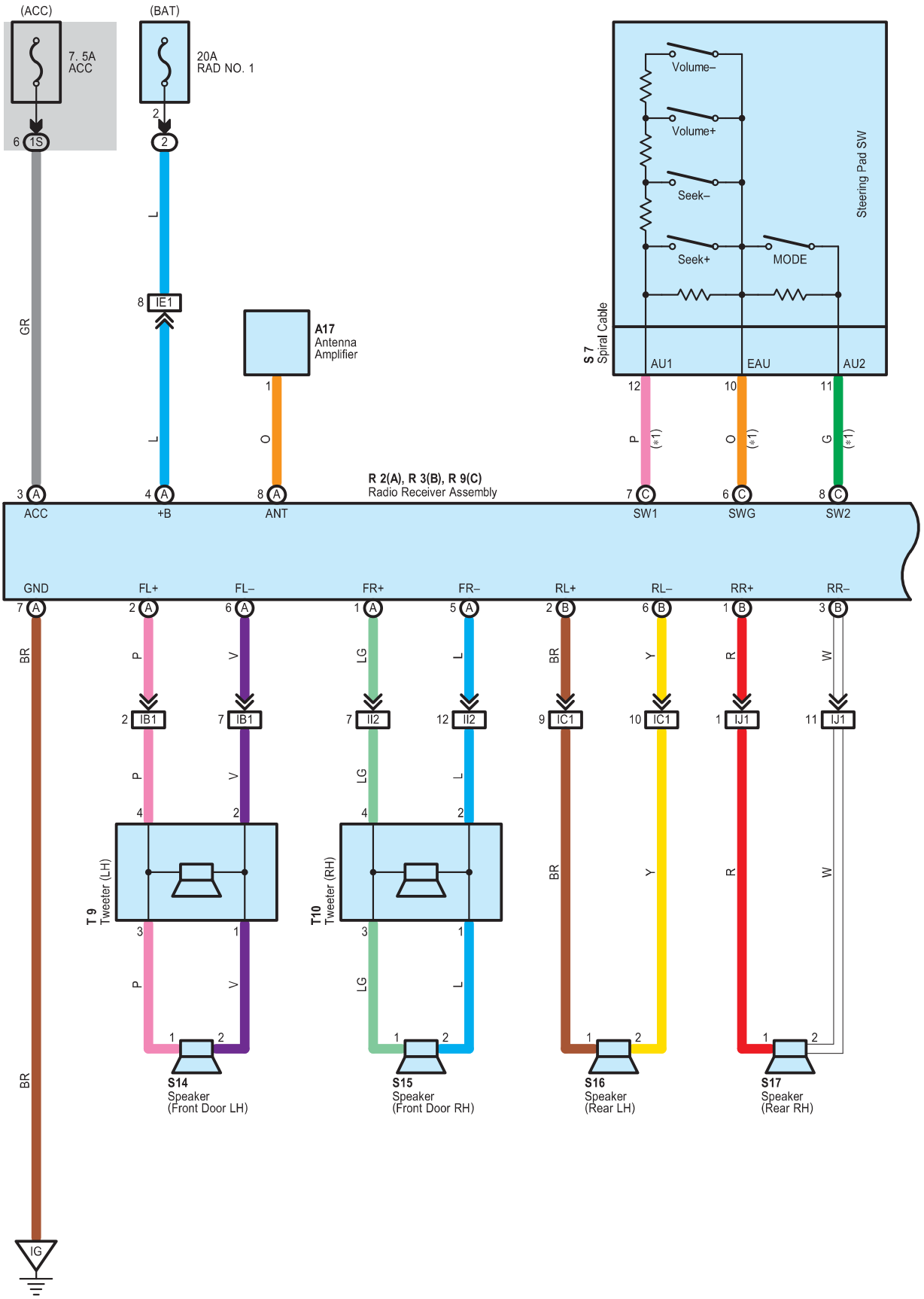
(ACC)
7. 5A
ACC
(BAT)
20A
RAD NO. 1
Volume–
Volume+
Seek–
Seek+
MODE
Steering Pad SW
S 7
Spiral Cable
AU1
EAU
AU2
A17
Antenna
Amplifier
R 2(A), R 3(B), R 9(C)
Radio Receiver Assembly
ACC
+B
ANT
SW1
SWG
SW2
GND
FL+
FL–
FR+
FR–
RL+
RL–
RR+
RR–
T 9
Tweeter (LH)
T10
Tweeter (RH)
S14
Speaker
(Front Door LH)
S15
Speaker
(Front Door RH)
S16
Speaker
(Rear LH)
S17
Speaker
(Rear RH)
IG